DATA SHEET

Priority Panel / 1 Bank CTU

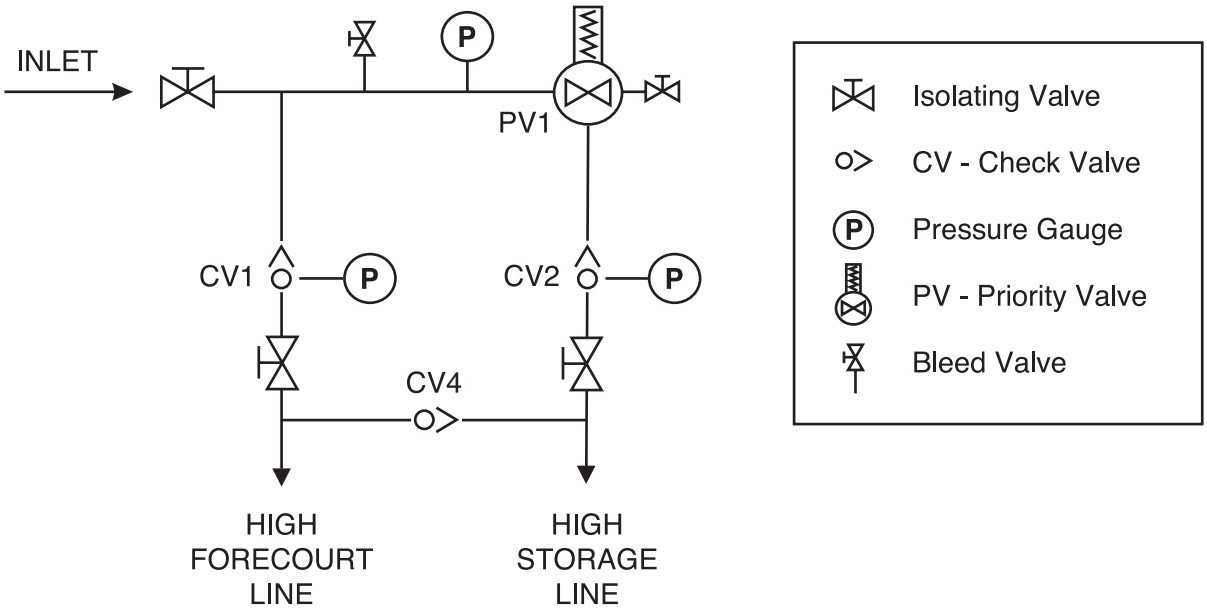

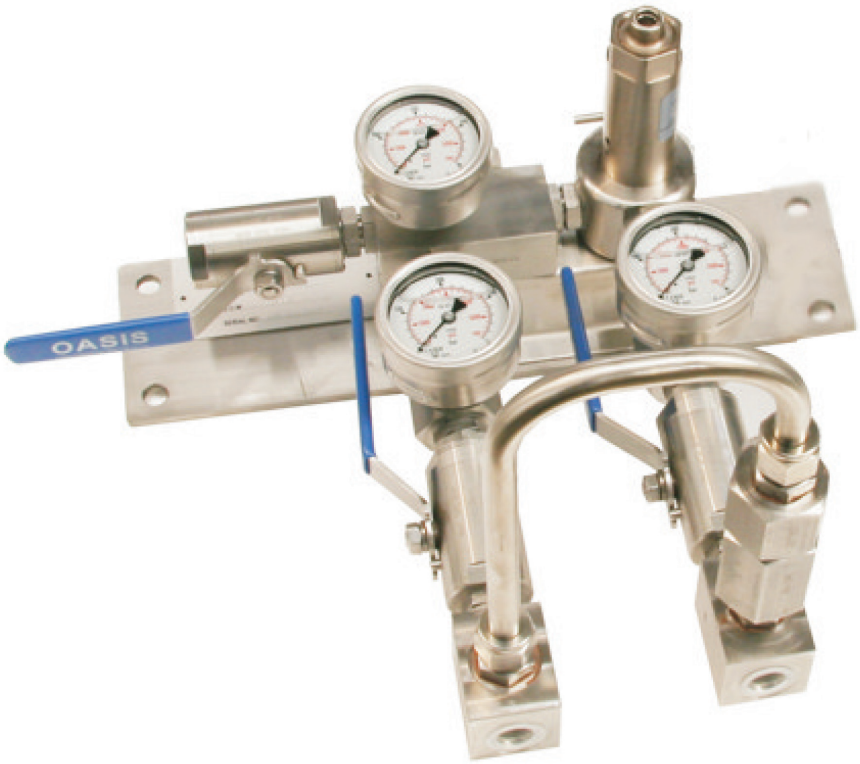

Compac Industries Ltd
52 Walls Road, Penrose, Auckland 1061, New Zealand
PO Box 12 417, Penrose, Auckland 1642, New Zealand
Tel: +64 9 579 2094, Fax: +64 9 579 0635
www.compacngv.com, www.compac.co.nz

Compac Sales Pty Ltd
32 Boundary St, South Melbourne, VIC 3205, Australia
PO Box 312, Port Melbourne, VIC 3207, Australia
Tel: +61 3 8696 4888, Fax: +61 3 8696 4817
www.compacsales.com.au

Compac Industries India Ltd
K 73 Udyog Nagar, Main Rohtak Road,
Delhi - 110041, India
Mobile: +91 85888 78287
www.compacindia.com

Version 5.0